RENAULT 5TL: economy without compromise

ECONOMY CHAMPION:
The Renault 5 TL has been designed with economy in mind: an ideal power to weight ratio, a special gear box with high ratios, a studied aerodynamic line. The result? One of the best *gasoline-powered cars according to tests carried out to standards set by Transport Canada.

City:	40 m.p.g. (64 km/g)
Highway:	57 m.p.g. (92 km/g)
Average City/Highway:	46 m.p.g. (74 km/g)

These test figures are, of course, theoretical, as are all such tests carried out in laboratories, and the results you obtain will vary according to the way in which the car is driven, the conditions of the road and vehicle, the temperature, the weather, etc. They do however prove, without a shadow of a doubt, the amazing economy of the Renault 5 TL. An economy achieved without compromise.

*As published in Edition I of the Guide to Gasoline Consumption, edited by Transport Canada.



NO COMPROMISE IN PERFORMANCE:

The 1300cc engine of the Renault 5 TL is "clean" and powerful. There is no catalytic convertor, no air pump, but 68.5 HP (SAE gross) at 6000 RPM which gives a top speed of 93 m.p.h. (149 km/h). The most powerful in its class, this engine, as well as the gear box, is guaranteed for two years or 40,000 km (subject to the conditions outlined in the Renault Warranty booklet).

Renault reserves the right to make changes at any time, without notice, to prices, colours, materials, equipment specifications and models, and to discontinue models.



NO COMPROMISE IN COMFORT OR ROOMINESS:

The Renault 5 TL follows the tradition of renowned Renault comfort provided by a long wheelbase, an all-independent torsion bar suspension with anti-roll bars and easily-accessible, scientifically designed seats. The Renault 5 TL provides 31.5 cubic feet of cargo space with the rear seat folded down. What is more, this space is easily usable thanks to the full hatchback. With the rear seat in its normal position, four people and their baggage can travel in comfort.

NO COMPROMISE IN EQUIPMENT:

Having front-wheel drive, front disc brakes, an electric rear-window de-fogger, Michelin steel-belted radial tires and rack and pinion steering, the Renault 5 TL is a thoroughly equipped and designed car…a car without compromise.

TECHNICAL SPECIFICATIONS RENAULT 5 TL

ENGINE	
Displacement	1289cc (78.6 cu. in.)
Compression ratio	9.5: 1
Bore and stroke	73 × 77mm (2.87" × 3.03")
Maximum HP SAE gross	68.5 HP at 6000 rpm
Maximum torque SAE gross	10.4m/kg at 3500 rpm (72 lb/ft at 3500 rpm)
Carburetor	Weber double barrel
Cooling	Closed circuit with permanent anti-freeze
ELECTRICAL EQUIPMENT	
Voltage	12 V
Battery capacity	250/50 amperes/hour
TRANSMISSION	
Gear box	4 on-the-floor
Gear ratios:	
1st	3.833: 1
2nd	2.235: 1
3rd	1.458: 1
4th	1.026: 1
Reverse	3.545: 1
Final drive ratio	3.100: 1 (10 × 31)
SUSPENSION/STEERING	
Type of steering	Rack and pinion
Steering ratio	20 : 1
Turning lock diameter (between curbs)	10.05 m (33 ft.)
Front suspension	Independent, with torsion bars and hydraulic, telescopic shock absorbers. Anti-sway bar.
Rear suspension	Independent, with torsion bars and hydraulic, telescopic shock absorbers. Anti-sway bar.
BRAKES/WHEELS	
Front brakes	Discs
Rear brakes	Drums
Braking corrector controls	Pressure drop indicator and brake liquid level indicator. Double circuit.
Wheels	4.50 × 13
Tires	Michelin steel-belted radials
Dimensions of tires	135 SR 13
DIMENSIONS/CAPACITIES	
Overall length	3.59 m (141.4")
Overall width	1.52 m (59.8")
Overall height (empty)	1.40 m (55.1")
Wheelbase:	Left – 2.40 m (94.5") Right – 2.43 m (95.7")
Weight (empty)	815 kg (1792 lbs)
Cargo capacity	10 cu.ft. 31.5 cu. ft. with rear seat folded down.

NO COMPROMISE IN STRENGTH:

Solidly built, and doubly protected against corrosion by factory-applied treatment and plastic front inner-fenders, the Renault 5 TL is exactly the same, mechanically, as the Renault 5 GTL models used by Lauri Paivarinta who won the Production Class of the 1977 Canadian National Rally Championship (with no modifications except obligatory rally equipment). What a test of strength!

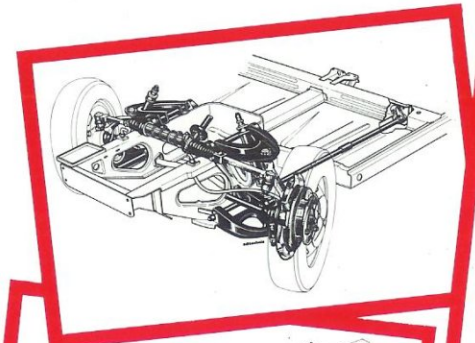

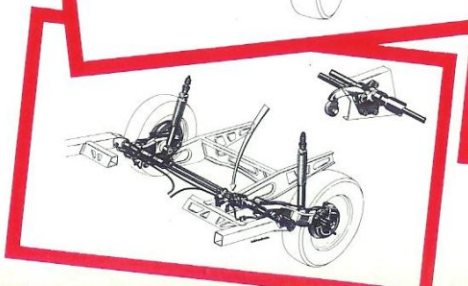

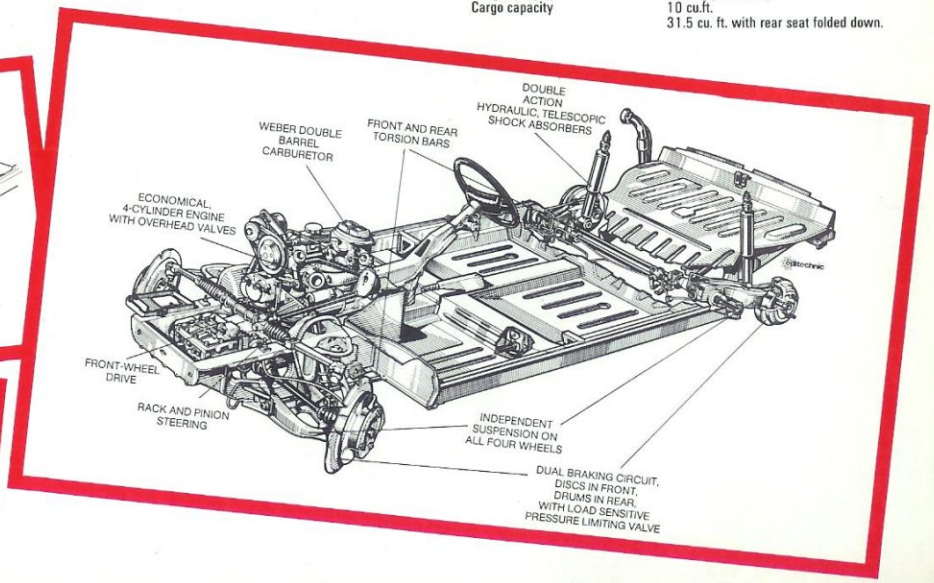

RENAULT